grin

GRAPHIC INDUSTRY

Dedicated to Quality.

grin
GRAPHIC INDUSTRY

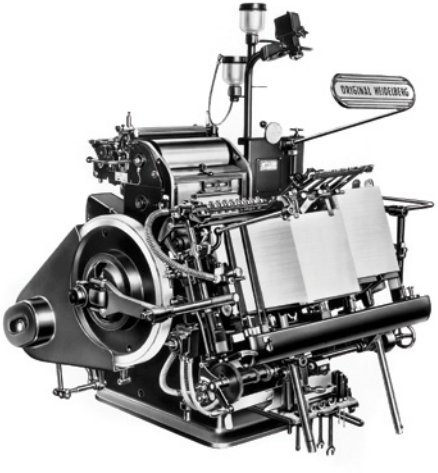

Together since 1958.

LETTER OF INTENT

“GRIN” Ltd. is a company founded back in 1958 in city of Gračanica, Bosnia and Herzegovina, and is operating at the same location ever since.

Even though it worked under different names, and functioned both as independent and affiliated company of larger labour organizations, its area of expertise always concerned the graphic industry in a way to respond to current trends through its equipment, technology and personnel.

Today, “GRIN” Ltd. is a reliable and leading B&H manufacturer of commercial paper and cardboard packaging, laminated packaging, labels, etc.

Aiming to fulfil every customer’s wish and expectation, we constantly improve our technologies, processes and products.

“GRIN”’s production facilities possess the best and most contemporary equipment.

Preparation process involves CTP technology as a precondition for superior printing.

The printing process is done in “Roland 705” and involves fully automated five colour graphic machines with inline varnishing and hot/IR ray dryers. The printing control is conducted throughout the process which results in each print being reliable and identical.

The equipment used for additional processing of materials to reach superior printing effect involve foil printing, Braille and tactile alphabet, diecutting, and multi-pointed gluing which can be delivered in form of brochure or soft and hard binding.

Such technology enables the production of a wide range of printed materials done on paper and/or cardboard; starting from the simplest printing, letterheads, dispatch notes or invitations to the brochures, catalogues, leaflets, books of hardcover binding, monographies, all types of calendar bindings, posters, etc.

Our range of activities fully cover the process of printing and production of laminated and commercial packaging for nutritional, chemical, pharmaceutical, tobacco, cosmetics, footwear, and textile industry, as well as production of labels for beer, soft drinks and alcohol, packaging for conditory industry, etc.

“GRIN”’s quality, professionalism, and reliability can be confirmed by the long list of our business partners: “Bihaćka pivovara”, “Vispak”, “AS”, “Kent”, “Mira”, “Farmavita”, “Bosnalijek”, “Bimal”, “Hepok”, “Pivara” Tuzla, “Mladegs pak”, “Biljana”, “Bajra”, “Brajlović”, “Solana”, “Fabrika duhana Sarajevo”, and particularly good relations with the German company “Elatec” in cooperation with which we supply the telecom operators in several European countries.

In addition to the above, we are free to propose a cooperation in the segment of printing and development of materials and products which might be needed in your company.

We hope that this letter would be understood as a gesture of good will resulting in established business cooperation.

“GRIN“ Ltd. Gračanica

Graphic Industry Dedicated to Quality, Graphic Industry Dedicated to Quality
grin
GRAPHIC INDUSTRY

grin
GRAPHIC INDUSTRY

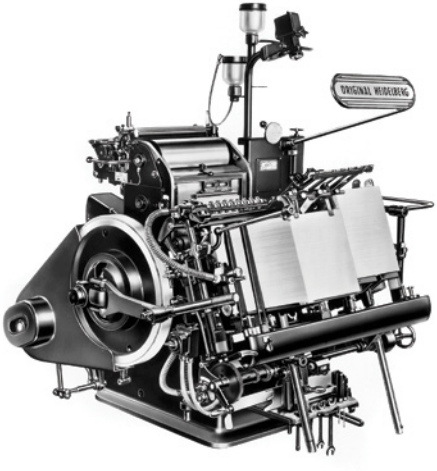

Zajedno od 1958.

PISMO NAMJERE

“GRIN” d.o.o. je firma osnovana davne 1958. godine.

Od osnivanja do danas posluje na istoj lokaciji bez ijednog dana prekida. Iako je od 1958. godine poslovala pod raznim imenima, udružvala se i razdruživala sa malim većim preduzećima, radnim organizacijama, SOUR-ima, cijelo vrijeme bavila se grafičkom djelatnošću stalno prateći trendove opremala se i tehnološki i kadrovski.

„GRIN“ danas je vodeći pouzdani proizvođač komercijalne papirne i kartonske ambalaže, kaširane ambalaže, etiketa i sl. u BiH.

Stalnim poboljšavanjem tehnologije, procesa i proizvoda spremni smo ispuniti svaku želju i očekivanje kupca.

U proizvodnim pogonima „GRIN-a“ instalirana je vrhunska i najsavremenija oprema.

U pripremi CTP tehnologija kao preduslov za vrhunsku štampu.

U štampi „Roland 705“, petobojni sa in line lakiranjem i sušačima sa toplim i IR zrakama uz potpuno automatsko upravljanje i kontrolu štampe, što je uslov da svaki otisak bude vjeran i isti.

U doradi oprema za oplemenjivanje vrhunskog otiska folijatiskom, slijepim tiskom, brajevim pismom, štancanjem, lijepljenjem sa više tačaka, uvezom u broširani, meki i tvrdi povez.

Ovakva tehnologija omogućava izradu veoma široke lepeze grafičkih proizvoda na bazi papira i kartona kao što su od najednostavnijih tiksanica, memoranduma, otpremnica, pozivnica, zatim brošura, kataloga, prospekata, knjiga mekog i tvrdog uveza, monografija, kalendara svih vrsta uveza, letaka, afiša i plakata itd.

Potpuno je zaokružen proces za štampu i izradu kaširane i komercijalne ambalaže za prehrambenu, hemijsku, farmaceutsku, duhansku, kozmetičku, obućarsku, tekstilnu industriju, izrada etiketa za pivo, alkolohna i bezalkoholna pića, omotnica za konditorsku industriju i sl.

Naš kvalitet, poslovnost, pouzdanost potvrđuje duga lista naših poslovnih partnera od kojih navodimo: “Bihaćka pivovara”, “Vispak”, “AS”, “Kent”, “Mira”, “Farmavita”, “Bosnalijek”, “Bimal”, “Hepok”, “Pivara” Tuzla, “Mladegs pak”, “Biljana”, “Bajra”, “Brajlović”, “Solana”, “Fabrika duhana” Sarajevo i posebno dobri odnosi su sa njemačkom firmom “Elatec” sa kojom u kooperaciji snabdijevamo telecom operatere u više zemalja Evrope.

Uz gore navedeno slobodni smo Vam predložiti saradnju u štampi i izradi materijala i proizvoda za potrebe Vaše firme.

Nadamo se da ćete ovo prihvatiti kao gestu dobre namjere i da ćete nas kontaktirati u cilju ostvarenja poslovne saradnje.

“GRIN” d.o.o. Gračanica

The printing process is done in “Roland 705” and involves fully automated five colour graphic machines with inline varnishing and hot/IR ray dryers. The printing control is conducted throughout the process which results in each print being reliable and identical.

grin
GRAPHIC INDUSTRY

“GRIN”’s quality, professionalism, and reliability can be confirmed by the long list of our business partners: “Bihaćka pivovara”, “Vispak”, “AS”, “Kent”, “Mira”, “Farmavita”, “Bosnalijek”, “Bimal”, “Hepok”, “Pivara” Tuzla, “Mladegs pak”, “Biljana”, “Bajra”, “Brajlović”, “Solana”, “Fabrika duhana Sarajevo”, and particularly good relations with the German company “Elatec” in cooperation with which we supply the telecom operators in several European countries.

VISPAK® Bimal Bonito ASGROUP FV

grin
GRAPHIC INDUSTRY

BOSNALIJEK

HEPOK MOSTAR

tuzlanski

FDS

1. Prepress - Grafička priprema

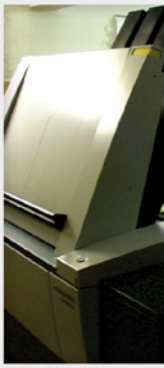

2. CTP - Kompju
osvjetljavanje

4. Making of boxes - Kartonaža

5. Bookbinding -

utersko
ploča

3. Printing - Ofsetna štampa

Knjigoveznica

6. Transport - Transport

SCAN WITH SMARTPHONE
TO VIEW VIDEO /
DA POGLEDATE VIDEO
SKENIRAJTE KOD SMART
TELEFONOM

GRIN d.o.o.
Patriotske lige bb, 75320 Gračanica
Bosnia and Herzegovina
Tel:+387 35 705-213
Email: info@grin.ba
www.grin.ba

GRIN d.o.o.
Patriotske lige bb, 75320 Gračanica
Bosnia and Herzegovina
Tel:+387 35 705-213
Email: info@grin.ba
www.grin.ba